Electrolux PROFESSIONAL

Vegetable Slicer
TrinityPro Combined Vegetable Slicer/ Cutter Mixer 2,6 Lt, copolyester - Single Speed

ITEM #

MODEL #

NAME #

SIS #

AIA #

602153 (COM26P)	Combined Vegetable Slicer and Cutter Mixer 2.6 lt, with transparent copolyester bowl, 1500 rpm, 3 discs included (slicer 2mm, slicer 5mm, grater 3mm), Schuko plug

Short Form Specification

Item No.

Combined Vegetable Slicer and Cutter Mixer with 2,6 litres, transparent copolyester bowl. Vegetable slicer ensures consistent cutting results thanks to the design patented lever-pusher. Constructed in a sturdy plastic material. 1,25 liters transparent half-moon hopper. Vegetables can be fed directly into the half moon hopper, a pusher presses the vegetables against the cutting discs ensuring an even cut in minimal time. 2 small hoppers for precise cuts on long vegetables dia. 55mm or 25mm. Ideal for grating, slicing/wavy slice, julienne and dicing. 3 discs included: slicer 2mm and 5mm, grater 3mm. A safety micro switch stops the blade when the feed hopper is opened.
Cutter Mixer transparent copolyester lid with scraper and central feed hole for adding products in mid-cycle. Microtoothed blade rotor. Angled blades and conical base of the bowl ensure consistent mixing. All ingredients are processed evenly and quickly thanks to a special flow generated inside the bowl.
No-volt release system prevents accidental start of the appliance. All parts in contact with food are removable and Dishwasher safe. Waterproof, easy to clean, flat, soft-touch buttons. Single speed 1500 rpm with on/pulse/off function for simple operations. With Schuko plug.

APPROVAL:

Main Features

- Combined appliance with two functions: vegetable slicer and cutter mixer.
- Equipped with vegetable slicer attachment for slicing, grating, shredding (julienne) as well as dicing and French fries cutting.
- Cutter mixer and emulsifier function included, for fast chopping, mixing, mincing, griding, liquidizing and kneading.
- Equipped with half moon hopper (1,25lt capacity) and 2 small round feed chutes: Ø 25mm and Ø 55mm, for precise slicing of long shaped vegetables.
- Uniform cuts and maximised load capacity, thanks to the design patented lever-pusher.
- Large output chute for efficient ejection. Fits up to 200mm high standard kitchen containers (like GN) under the output chute.
- Continuous feed model.
- Pulse function for quick and precise slicing and grating.
- Ergonomical frontal lever, suitable for left handed and right handed operators.
- Vegetable slicer blade stops when lever pusher is lifted for operator safety.
- Model includes 3 discs: slicer 2mm, slicer 5mm, grater 3mm.
- Optional discs and grids available of various sizes for slicing, dicing, grating and shredding (diam. 175mm).
- Bowl/lid scraper included for uniform smooth results (emulsifying) and continuous working.
- Transparent lid, with funnel shaped hole, to add ingredients during use.
- All ingredients are processed evenly and quickly thanks to a special movement generated inside the bowl.
- Pulse function for coarse chopping.
- Easy to clean and waterproof control panel with flat on/off button and pulse function.
- All parts in contact with food are removable without the use of tools, completely dismountable and dishwasher safe.
- Productivity: up to 100 settings per service for vegetable slicer, up to 50 settings per service for cutter mixer function.
- ErgoCert 4-star certification for ergonomic design and ease of use.
- Includes 2,6 liter, transparent bowl with micro-toothed blades rotor.

Construction

- 1 speed: 1.500 rpm.
- Micro-toothed blades in 420 AISI stainless steel and ergonomic scraper in resistant composite material to ensure consistent mixing.
- IPX5 (IP55) waterproof, flat, touch-control panel.
- Main switch ON/OFF on the back of the appliance.
- Asynchronous industrial motor with no brushes for high reliability and quiet functioning, stainless steel motor shaft.
- Power: 500 Watts.
- Bowl in BPA-free, transparent copolyester.
- Food safety assured in accordance to European directives and UK legislation. In addition, materials in contact with food, are BPA-free.
- Product safety conform to European directives, UK legislation and international health and safety standards.

Included Accessories

- 1 of Transparent lid for 2,6lt Cutter Mixer bowl PNC 650117
- 1 of Kit including 3 discs dia. 175mm (slicer 2mm, slicer 5mm, grater 3mm) PNC 650196
- 1 of Microtoothed blade rotor for 2.6lt Cutter Mixer PNC 650226
- 1 of Transparent copolyester bowl for 2,6lt Cutter Mixer PNC 650229
- 1 of Scraper for 2.6lt Cutter Mixer bowl PNC 650230
- 1 of Ejector for Vegetable Slicer PNC 650232

Optional Accessories

- Cleaning tool for TRS, TRK & TR210 5-8-10 mm dicing grids PNC 650110 ❑
- Transparent lid for 2,6lt Cutter Mixer bowl PNC 650117 ❑
- Transparent lid without sealing for 3,6lt Cutter Mixer bowl (1 speed models) PNC 650118 ❑
- Kit including 3 discs dia. 175mm (slicer 2mm, slicer 5mm, grater 3mm) PNC 650196 ❑
- Kit including 6 discs dia. 175mm (slicer 2mm, slicer 5mm, grater 3mm, grater 7mm, slicer 10mm, grid 10x10mm) PNC 650197 ❑
- Stainless steel grating disc 2 mm (dia. 175mm) PNC 650198 ❑
- Stainless steel grating disc 3 mm (dia. 175mm) PNC 650199 ❑
- Stainless steel grating disc 4 mm (dia. 175mm) PNC 650205 ❑
- Stainless steel grating disc 7 mm (dia. 175mm) PNC 650207 ❑
- Parmesan Disc PNC 650208 ❑
- Stainless steel shredding disc 2 mm (dia. 175mm) PNC 650209 ❑
- Stainless steel shredding disc 4 mm (dia. 175mm) PNC 650210 ❑
- Stainless steel shredding disc 8 mm for French fries (dia. 175mm) PNC 650211 ❑
- Stainless steel slicing disc 1 mm (dia. 175mm) PNC 650213 ❑
- Stainless steel slicing disc 2 mm (dia. 175mm) PNC 650214 ❑
- Stainless steel slicing disc 3 mm (dia. 175mm) PNC 650215 ❑
- Stainless steel slicing disc 5 mm (dia. 175mm) PNC 650216 ❑
- Stainless steel slicing disc 6 mm (dia. 175mm) PNC 650217 ❑
- Stainless steel wavy slicing disc 3 mm (dia. 175mm) PNC 650218 ❑
- Stainless steel wavy slicing disc 5 mm (dia. 175mm) PNC 650219 ❑
- Aluminum slicing disc 8 mm (dia. 175mm) PNC 650220 ❑
- Aluminum slicing disc 10 mm (dia. 175mm) PNC 650221 ❑
- Dicing grid 8x8 (dia 175mm) PNC 650222 ❑
- Dicing grid 10x10 (dia 175mm) PNC 650223 ❑
- Dicing kit 8mm (aluminum slicer 8mm, grid 8x8mm) (dia. 175mm) PNC 650224 ❑
- Dicing kit 10mm (aluminum slicer 10mm, grid 10x10 mm) (dia. 175mm) PNC 650225 ❑
- Microtoothed blade rotor for 2.6lt Cutter Mixer PNC 650226 ❑
- Smooth blade rotor for 2.6lt Cutter Mixer PNC 650227 ❑
- Stainless steel bowl for 2,6lt Cutter Mixer PNC 650228 ❑
- Transparent copolyester bowl for 2,6lt Cutter Mixer PNC 650229 ❑
- Scraper for 2.6lt Cutter Mixer bowl PNC 650230 ❑
- Stainless steel bowl for 2,6lt Cutter Mixer, microtoothed rotor, lid with scraper PNC 650231 ❑
- Ejector for Vegetable Slicer PNC 650232 ❑
- Microtoothed blade rotor for 3.6lt Cutter Mixer PNC 650233 ❑
- Smooth blade rotor for 3.6lt Cutter Mixer PNC 650234 ❑
- Stainless steel bowl for 3.6lt Cutter Mixer PNC 650235 ❑
- Scraper for 3.6lt Cutter Mixer bowl PNC 650236 ❑
- Stainless steel slicing disc 4 mm (dia. 175mm) PNC 650237 ❑
- Transparent bowl for 2,6lt cutter mixer, microtoothed rotor, lid with scraper PNC 650245 ❑
- Support for 1 disc, diam. 175mm and 205mm PNC 653632 ❑

The company reserves the right to make modifications to the products without prior notice. All information correct at time of printing.

Vegetable Slicer
TrinityPro Combined Vegetable Slicer/Cutter Mixer 2,6 Lt, copolyester - Single Speed

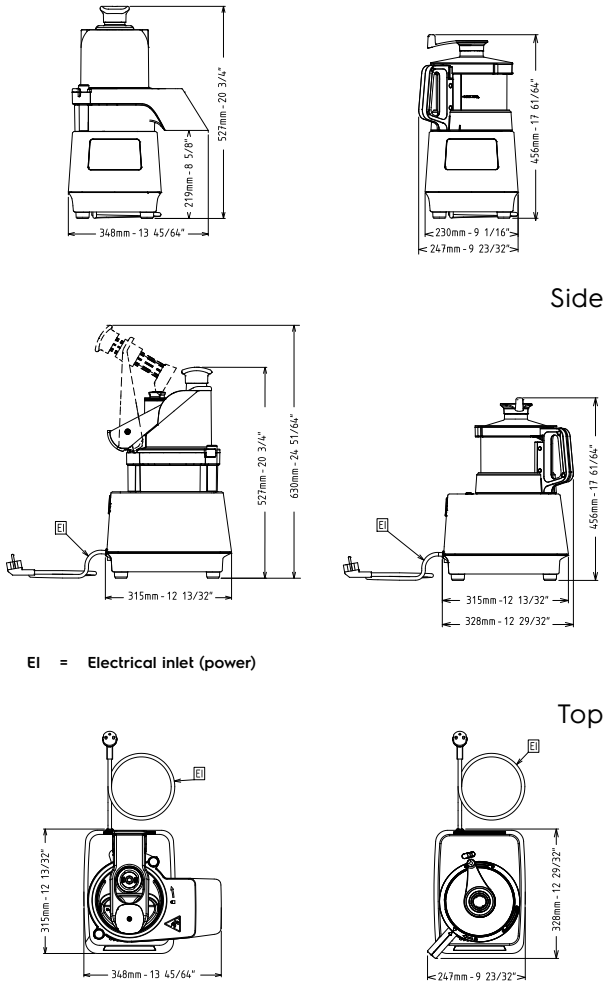

Electric

Supply voltage:	
602153 (COM26P)	220-240 V/1N ph/50 Hz
Electrical power max.:	0.5 kW
Total Watts:	0.5 kW

Capacity:

Performance (up to):	150 kg/hour

Key Information:

External dimensions, Width:	348 mm
External dimensions, Depth:	328 mm
External dimensions, Height:	527 mm
Shipping weight:	18.7 kg

The company reserves the right to make modifications to the products without prior notice. All information correct at time of printing.

2024.10.07